Deep groove ball bearing 6008 HVZZ SNR

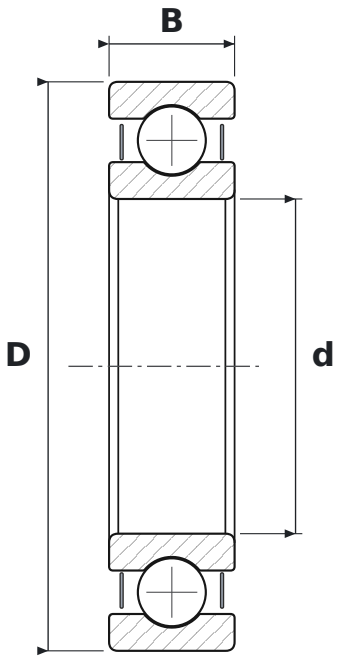

DIMENSIONS

d	bore diameter	**40 mm**
D	outside diameter	**68 mm**
B	width	**15 mm**

SPECIFICATIONS

Manufacturer	**SNR**
Manufacturer designation	**6008 HVZZ**
Rolling elements	**single-row ball bearing**
2Z	**steel shields, both sides**
Radial internal clearance	**CN – normal**
Mass	**0.18 kg**