CASTOMER

DATASHEET

Deep groove ball bearing 6008 NR SKF

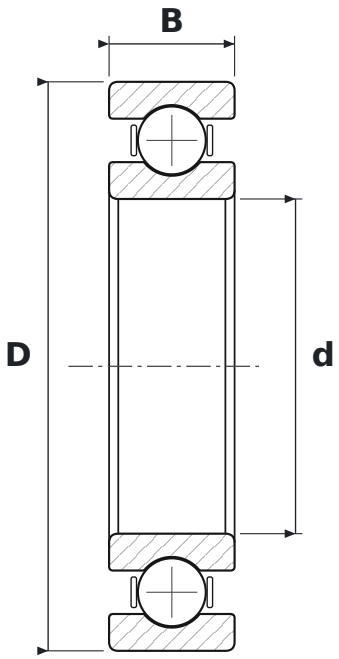

DIMENSIONS

d	bore diameter	**40 mm**
D	outside diameter	**68 mm**
B	width	**15 mm**

WHAT 6008 NR MEANS

60	łożysko kulkowe zwykłe (6), seria średnic 0 – bardzo lekka
NR	snap ring groove with snap ring

SPECIFICATIONS

Manufacturer	**SKF**
Manufacturer designation	**6008 NR**
Rolling elements	**single-row ball bearing**
Basic dynamic load rating C	**17.8 kN**
Basic static load rating C0	**11 kN**
Mass	**0.194 kg**