Deep groove ball bearing 6008-Z FAG

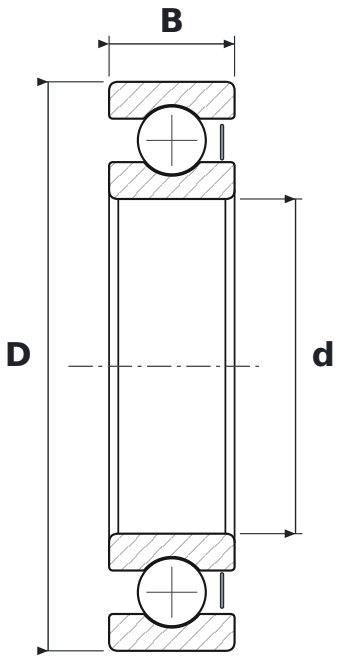

DIMENSIONS

d	bore diameter	**40 mm**
D	outside diameter	**68 mm**
B	width	**15 mm**

WHAT 6008-Z MEANS

60	łożysko kulkowe zwykłe (6), seria średnic 0 – bardzo lekka
Z	steel shield, one side

SPECIFICATIONS

Manufacturer	**FAG**
Manufacturer designation	**6008-Z**
Rolling elements	**single-row ball bearing**
Mass	**0.194 kg**