Deep groove ball bearing 6009-2RSC3 KOYO

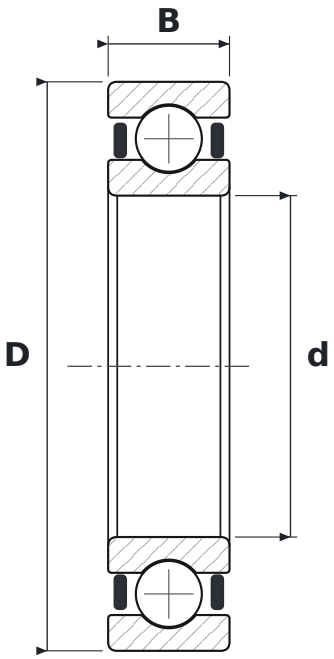

DIMENSIONS

d	bore diameter	**45 mm**
D	outside diameter	**75 mm**
B	width	**16 mm**

WHAT 6009-2RSC3 MEANS

60	łożysko kulkowe zwykłe (6), seria średnic 0 – bardzo lekka
2RS	uszczelnienia stykowe, dwustronne
C3	radial clearance greater than normal

SPECIFICATIONS

Manufacturer	**KOYO**
Manufacturer designation	**6009-2RSC3**
Rolling elements	**single-row ball bearing**