Deep groove ball bearing 6009-ZC3 SKF

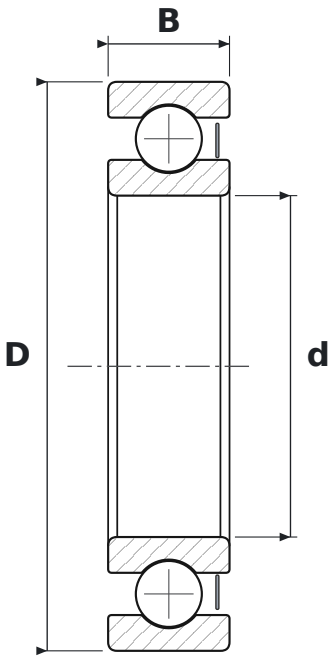

DIMENSIONS

d	bore diameter	**45 mm**
D	outside diameter	**75 mm**
B	width	**16 mm**

WHAT 6009-ZC3 MEANS

60	łożysko kulkowe zwykłe (6), seria średnic 0 – bardzo lekka
Z	steel shield, one side
C3	radial clearance greater than normal

SPECIFICATIONS

Manufacturer	**SKF**
Manufacturer designation	**6009-ZC3**
Rolling elements	**single-row ball bearing**
Basic dynamic load rating C	**22.1 kN**
Basic static load rating C0	**14.6 kN**
Mass	**0.239 kg**