Deep groove ball bearing 6010-2ZC3 NKE

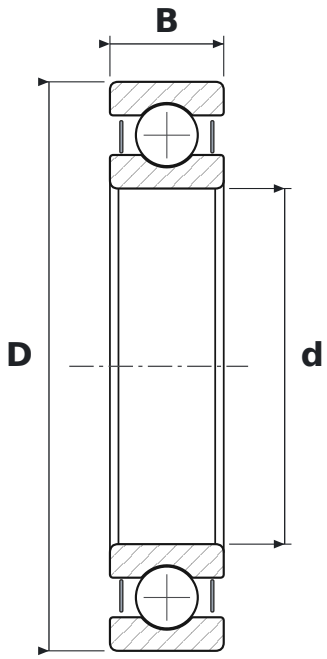

DIMENSIONS

d	bore diameter	**50 mm**
D	outside diameter	**80 mm**
B	width	**16 mm**

WHAT 6010-2ZC3 MEANS

60	łożysko kulkowe zwykłe (6), seria średnic 0 – bardzo lekka
2Z	steel shields, both sides
C3	radial clearance greater than normal

SPECIFICATIONS

Manufacturer	**NKE**
Manufacturer designation	**6010-2ZC3**
Rolling elements	**single-row ball bearing**
Mass	**0.267 kg**