Deep groove ball bearing 6010-ZZ-C3 TIMKEN

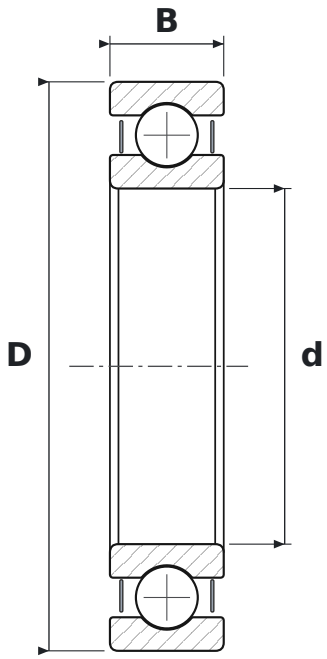

DIMENSIONS

d	bore diameter	**50 mm**
D	outside diameter	**80 mm**
B	width	**16 mm**

WHAT 6010-ZZ-C3 MEANS

60	łożysko kulkowe zwykłe (6), seria średnic 0 – bardzo lekka
ZZ	blaszki ochronne, dwustronne
C3	radial clearance greater than normal

SPECIFICATIONS

Manufacturer	**TIMKEN**
Manufacturer designation	**6010-ZZ-C3**
Rolling elements	**single-row ball bearing**