Deep groove ball bearing 6010-2Z SKF

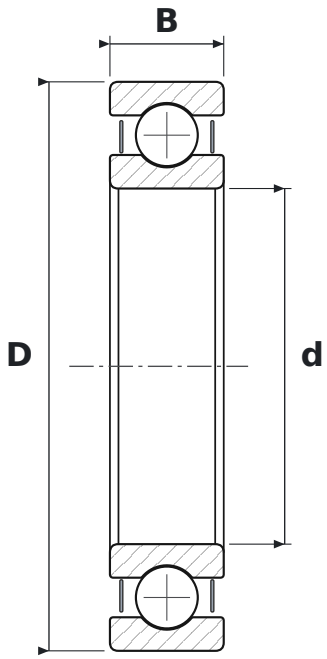

DIMENSIONS

d	bore diameter	**50 mm**
D	outside diameter	**80 mm**
B	width	**16 mm**

WHAT 6010-2Z MEANS

60	łożysko kulkowe zwykłe (6), seria średnic 0 – bardzo lekka
2Z	steel shields, both sides

SPECIFICATIONS

Manufacturer	**SKF**
Manufacturer designation	**6010-2Z**
Rolling elements	**single-row ball bearing**
Basic dynamic load rating C	**22.9 kN**
Basic static load rating C0	**16 kN**
Mass	**0.268 kg**