Deep groove ball bearing 6010 ZZCM/5K NTN

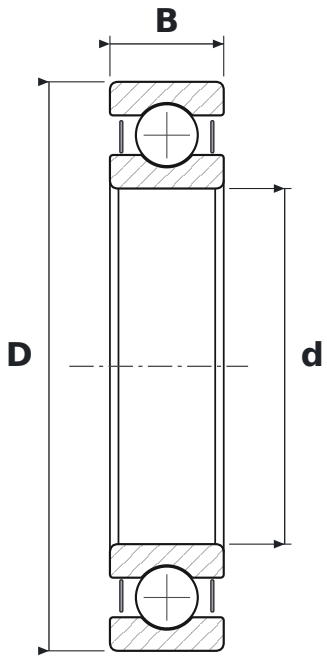

DIMENSIONS

d	bore diameter	**50 mm**
D	outside diameter	**80 mm**
B	width	**16 mm**

WHAT 6010 ZZCM/5K MEANS

60	łożysko kulkowe zwykłe (6), seria średnic 0 – bardzo lekka
ZZ	blaszki ochronne, dwustronne
CM	clearance for electric motors (quiet running)
5K	smar Kyodo Yushi Multemp SRL (od −40 do +150 °C)

SPECIFICATIONS

Manufacturer	**NTN**
Manufacturer designation	**6010 ZZCM/5K**
Rolling elements	**single-row ball bearing**