# Deep groove ball bearing 6011-2Z ZEN

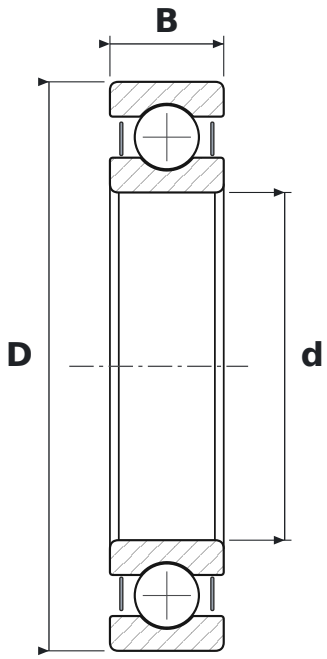


## DIMENSIONS

| | | |
|---|---|---|
| **d** | bore diameter | **55 mm** |
| **D** | outside diameter | **90 mm** |
| **B** | width | **18 mm** |

## WHAT 6011-2Z MEANS

| | |
|---|---|
| **60** | łożysko kulkowe zwykłe (6), seria średnic 0 – bardzo lekka |
| **2Z** | steel shields, both sides |

## SPECIFICATIONS

| | |
|---|---|
| Manufacturer | **ZEN** |
| Manufacturer designation | **6011-2Z** |
| Rolling elements | **single-row ball bearing** |