Deep groove ball bearing 6011 HVZZ SNR

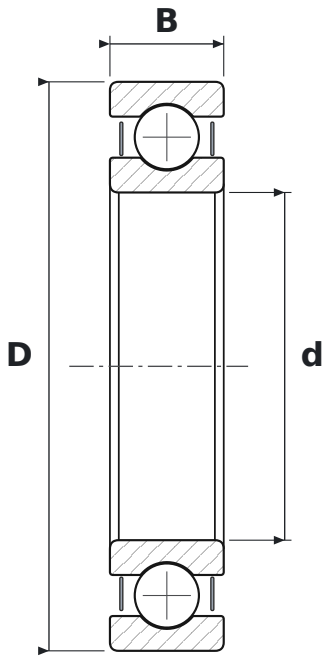

DIMENSIONS

d	bore diameter	**55 mm**
D	outside diameter	**90 mm**
B	width	**18 mm**

SPECIFICATIONS

Manufacturer	**SNR**
Manufacturer designation	**6011 HVZZ**
Rolling elements	**single-row ball bearing**
2Z	**steel shields, both sides**
Radial internal clearance	**CN – normal**
Mass	**0.382 kg**