Deep groove ball bearing 6011-Z-C3 FAG

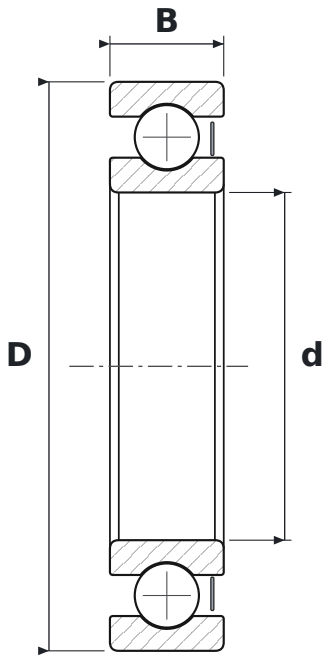

DIMENSIONS

d	bore diameter	**55 mm**
D	outside diameter	**90 mm**
B	width	**18 mm**

WHAT 6011-Z-C3 MEANS

60	łożysko kulkowe zwykłe (6), seria średnic 0 – bardzo lekka
Z	steel shield, one side
C3	radial clearance greater than normal

SPECIFICATIONS

Manufacturer	**FAG**
Manufacturer designation	**6011-Z-C3**
Rolling elements	**single-row ball bearing**
Mass	**0.385 kg**