Deep groove ball bearing 6011 ZZ KOYO

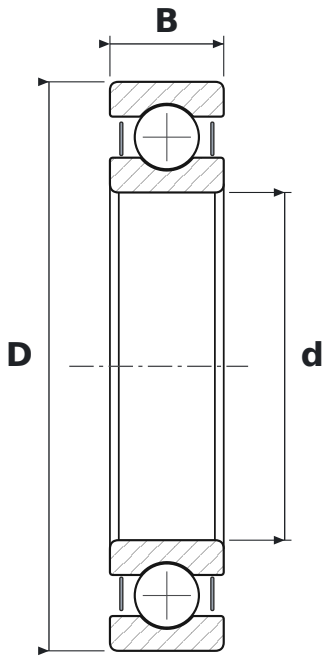

DIMENSIONS

d	bore diameter	**55 mm**
D	outside diameter	**90 mm**
B	width	**18 mm**

WHAT 6011 ZZ MEANS

60	łożysko kulkowe zwykłe (6), seria średnic 0 – bardzo lekka
ZZ	blaszki ochronne, dwustronne

SPECIFICATIONS

Manufacturer	**KOYO**
Manufacturer designation	**6011 ZZ**
Rolling elements	**single-row ball bearing**