Deep groove ball bearing 6011-2Z/C3 SKF

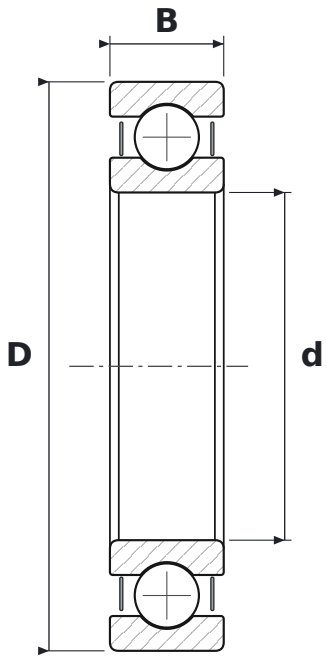

DIMENSIONS

d	bore diameter	**55 mm**
D	outside diameter	**90 mm**
B	width	**18 mm**

WHAT 6011-2Z/C3 MEANS

60	łożysko kulkowe zwykłe (6), seria średnic 0 – bardzo lekka
2Z	steel shields, both sides
C3	radial clearance greater than normal

SPECIFICATIONS

Manufacturer	**SKF**
Manufacturer designation	**6011-2Z/C3**
Rolling elements	**single-row ball bearing**
Basic dynamic load rating C	**29.6 kN**
Basic static load rating C0	**21.2 kN**
Mass	**0.39 kg**