Deep groove ball bearing 6011-ZZE INNE

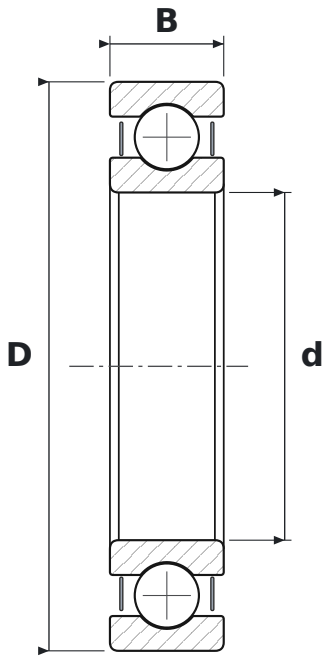

DIMENSIONS

d	bore diameter	**55 mm**
D	outside diameter	**90 mm**
B	width	**18 mm**

WHAT 6011-ZZE MEANS

60	łożysko kulkowe zwykłe (6), seria średnic 0 – bardzo lekka
ZZ	blaszki ochronne, dwustronne
E	reinforced design, higher load rating

SPECIFICATIONS

Manufacturer	**INNE**
Manufacturer designation	**6011-ZZE**
Rolling elements	**single-row ball bearing**
Mass	**0.38 kg**