Deep groove ball bearing 6012-C3 FAG

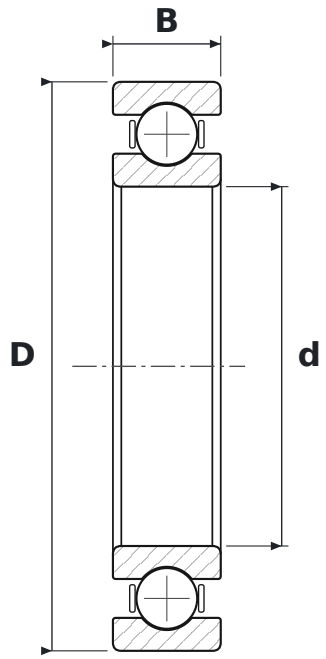

DIMENSIONS

d	bore diameter	**60 mm**
D	outside diameter	**95 mm**
B	width	**18 mm**

WHAT 6012-C3 MEANS

60	łożysko kulkowe zwykłe (6), seria średnic 0 – bardzo lekka
C3	radial clearance greater than normal

SPECIFICATIONS

Manufacturer	**FAG**
Manufacturer designation	**6012-C3**
Rolling elements	**single-row ball bearing**