Deep groove ball bearing 6012 FAG

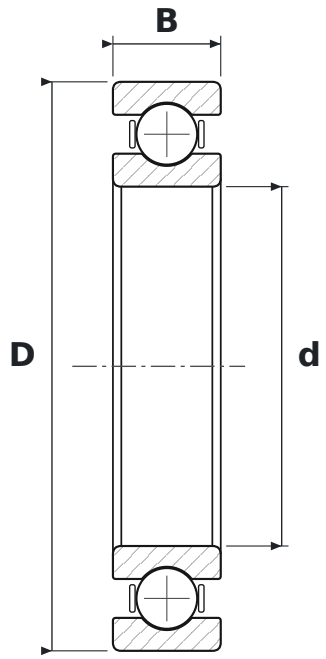

DIMENSIONS

d	bore diameter	**60 mm**
D	outside diameter	**95 mm**
B	width	**18 mm**

SPECIFICATIONS

Manufacturer	**FAG**
Manufacturer designation	**6012**
Rolling elements	**single-row ball bearing**
Seal	**open – no seals**
Radial internal clearance	**CN – normal**
Mass	**0.415 kg**