Deep groove ball bearing 6012-ZZ-C3 TIMKEN

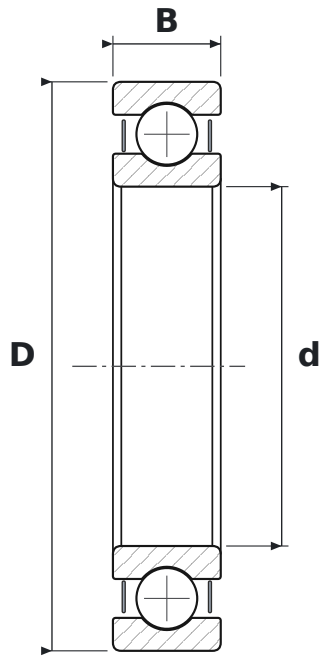

DIMENSIONS

d	bore diameter	**60 mm**
D	outside diameter	**95 mm**
B	width	**18 mm**

WHAT 6012-ZZ-C3 MEANS

60	łożysko kulkowe zwykłe (6), seria średnic 0 – bardzo lekka
ZZ	blaszki ochronne, dwustronne
C3	radial clearance greater than normal

SPECIFICATIONS

Manufacturer	**TIMKEN**
Manufacturer designation	**6012-ZZ-C3**
Rolling elements	**single-row ball bearing**