Deep groove ball bearing 6012 ZZC3 KOYO

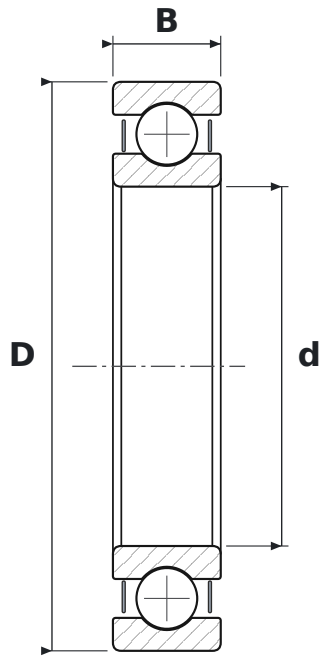

DIMENSIONS

d	bore diameter	**60 mm**
D	outside diameter	**95 mm**
B	width	**18 mm**

WHAT 6012 ZZC3 MEANS

60	łożysko kulkowe zwykłe (6), seria średnic 0 – bardzo lekka
ZZ	blaszki ochronne, dwustronne
C3	radial clearance greater than normal

SPECIFICATIONS

Manufacturer	**KOYO**
Manufacturer designation	**6012 ZZC3**
Rolling elements	**single-row ball bearing**