Deep groove ball bearing 608-2ZC3LHT30 SKF

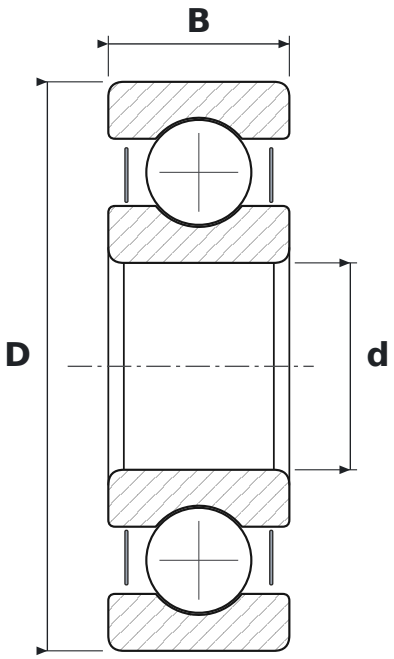

DIMENSIONS

d	bore diameter	**8 mm**
D	outside diameter	**22 mm**
B	width	**7 mm**

SPECIFICATIONS

Manufacturer	**SKF**
Manufacturer designation	**608-2ZC3LHT30**
Rolling elements	**single-row ball bearing**
2Z	**steel shields, both sides**
C3	**radial clearance greater than normal**
Mass	**0.012 kg**