Deep groove ball bearing 608-Z SKF

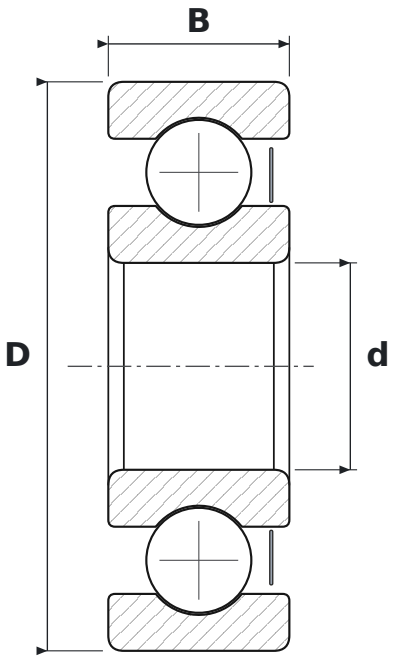

DIMENSIONS

d	bore diameter	**8 mm**
D	outside diameter	**22 mm**
B	width	**7 mm**

SPECIFICATIONS

Manufacturer	**SKF**
Manufacturer designation	**608-Z**
Rolling elements	**single-row ball bearing**
Z	**steel shield, one side**
Radial internal clearance	**CN – normal**
Mass	**0.012 kg**