Deep groove ball bearing 608-2Z/C3GJN SKF

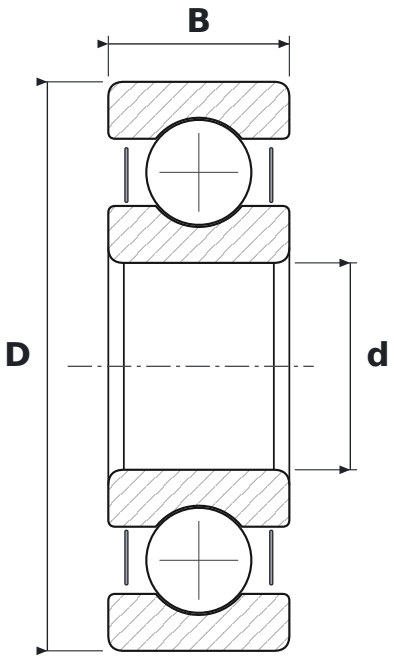

DIMENSIONS

d	bore diameter	**8 mm**
D	outside diameter	**22 mm**
B	width	**7 mm**

WHAT 608-2Z/C3GJN MEANS

2Z	steel shields, both sides
C3	radial clearance greater than normal
GJN	smar wysokotemperaturowy: zagęszczacz polimocznikowy, olej mineralny, NLGI 2

SPECIFICATIONS

Manufacturer	**SKF**
Manufacturer designation	**608-2Z/C3GJN**
Rolling elements	**single-row ball bearing**
Mass	**0.012 kg**