Deep groove ball bearing 608-2Z/C3WT SKF

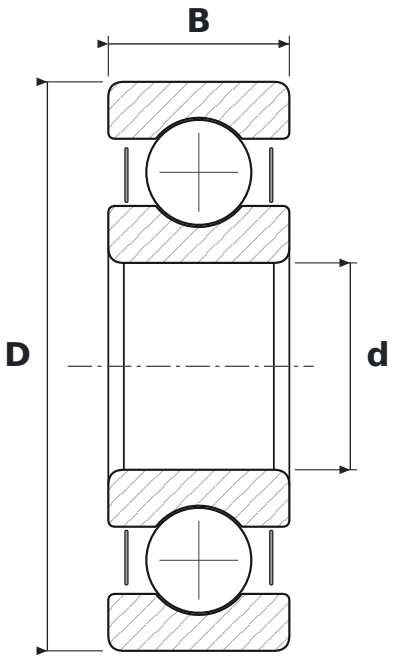

DIMENSIONS

d	bore diameter	**8 mm**
D	outside diameter	**22 mm**
B	width	**7 mm**

WHAT 608-2Z/C3WT MEANS

2Z	steel shields, both sides
C3	radial clearance greater than normal
WT	smar o szerokim zakresie temperatur: zagęszczacz polimocznikowy, olej estrowy, NLGI 2–3

SPECIFICATIONS

Manufacturer	**SKF**
Manufacturer designation	**608-2Z/C3WT**
Rolling elements	**single-row ball bearing**