Deep groove ball bearing 609-2Z FAG

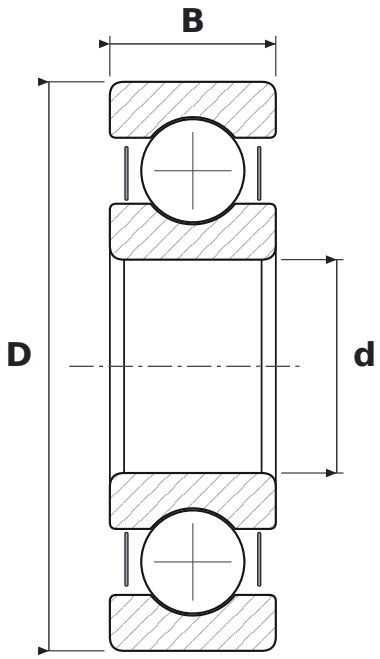

DIMENSIONS

d	bore diameter	**9 mm**
D	outside diameter	**24 mm**
B	width	**7 mm**

SPECIFICATIONS

Manufacturer	**FAG**
Manufacturer designation	**609-2Z**
Rolling elements	**single-row ball bearing**
2Z	**steel shields, both sides**
Radial internal clearance	**CN – normal**