CASTOMER

DATASHEET

# Deep groove ball bearing 609 JX2ZZC3/5K NTN

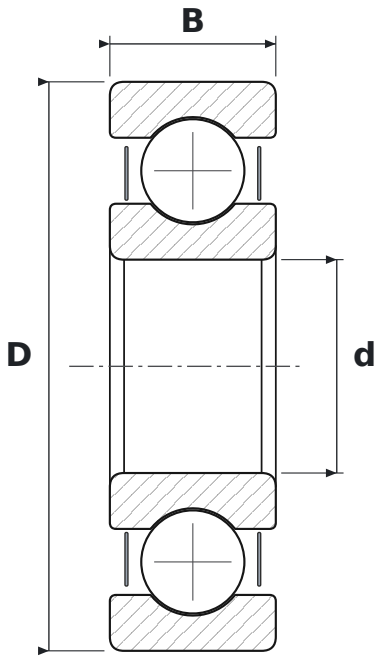


## DIMENSIONS

| | | |
|---|---|---|
| **d** | bore diameter | **9 mm** |
| **D** | outside diameter | **24 mm** |
| **B** | width | **7 mm** |

## SPECIFICATIONS

| | |
|---|---|
| Manufacturer | **NTN** |
| Manufacturer designation | **609 JX2ZZC3/5K** |
| Rolling elements | **single-row ball bearing** |
| J | **pressed steel cage** |
| 2Z | **steel shields, both sides** |
| Z | **steel shield, one side** |
| C3 | **radial clearance greater than normal** |