Deep groove ball bearing 609 VVMC3 NSK

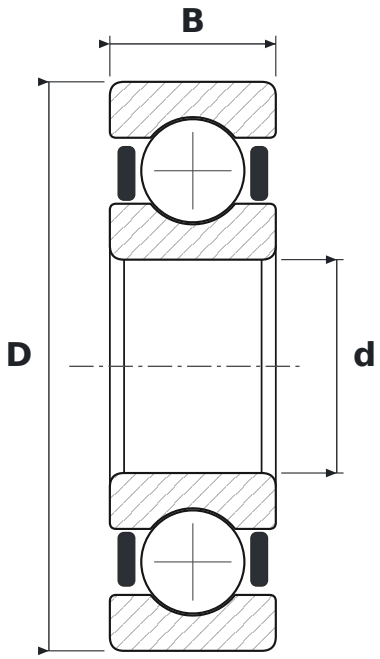

DIMENSIONS

d	bore diameter	**9 mm**
D	outside diameter	**24 mm**
B	width	**7 mm**

WHAT 609 VVMC3 MEANS

VV	uszczelnienia gumowe bezstykowe, dwustronne, od −10 do +110 °C
M	machined brass cage
C3	radial clearance greater than normal

SPECIFICATIONS

Manufacturer	**NSK**
Manufacturer designation	**609 VVMC3**
Rolling elements	**single-row ball bearing**