Deep groove ball bearing 618/7 SKF

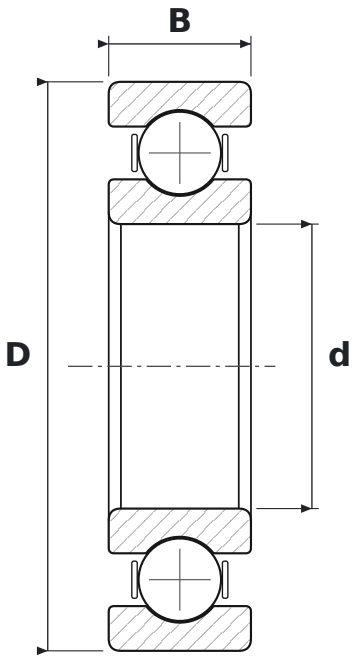

DIMENSIONS

d	bore diameter	**7 mm**
D	outside diameter	**14 mm**
B	width	**3.5 mm**

SPECIFICATIONS

Manufacturer	**SKF**
Manufacturer designation	**618/7**
Rolling elements	**single-row ball bearing**
Seal	**open – no seals**
Radial internal clearance	**CN – normal**
Mass	**0.002 kg**