Deep groove ball bearing 61800-C3 NKE

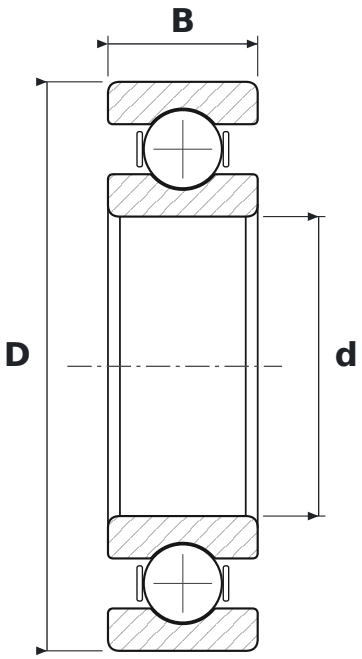

DIMENSIONS

d	bore diameter	**10 mm**
D	outside diameter	**19 mm**
B	width	**5 mm**

WHAT 61800-C3 MEANS

618	łożysko kulkowe zwykłe (6), seria 18 – cienkościenna
C3	radial clearance greater than normal

SPECIFICATIONS

Manufacturer	**NKE**
Manufacturer designation	**61800-C3**
Rolling elements	**single-row ball bearing**