Deep groove ball bearing 61800 J ZEN

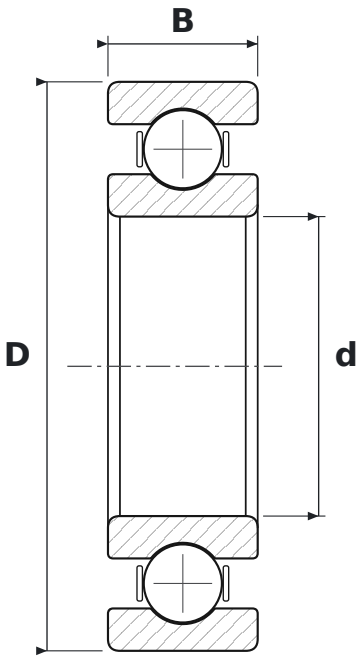

DIMENSIONS

d	bore diameter	**10 mm**
D	outside diameter	**19 mm**
B	width	**5 mm**

WHAT 61800 J MEANS

618	łożysko kulkowe zwykłe (6), seria 18 – cienkościenna
J	pressed steel cage

SPECIFICATIONS

Manufacturer	**ZEN**
Manufacturer designation	**61800 J**
Rolling elements	**single-row ball bearing**
Mass	**0.005 kg**