Deep groove ball bearing 61802-2Z NKE

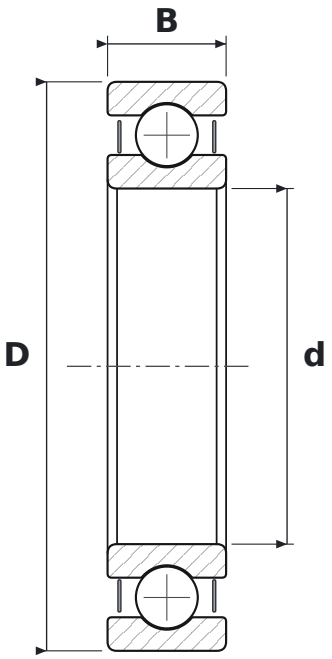

DIMENSIONS

d	bore diameter	**15 mm**
D	outside diameter	**24 mm**
B	width	**5 mm**

WHAT 61802-2Z MEANS

618	łożysko kulkowe zwykłe (6), seria 18 – cienkościenna
2Z	steel shields, both sides

SPECIFICATIONS

Manufacturer	**NKE**
Manufacturer designation	**61802-2Z**
Rolling elements	**single-row ball bearing**
Mass	**0.01 kg**