Deep groove ball bearing 61900-2Z NKE

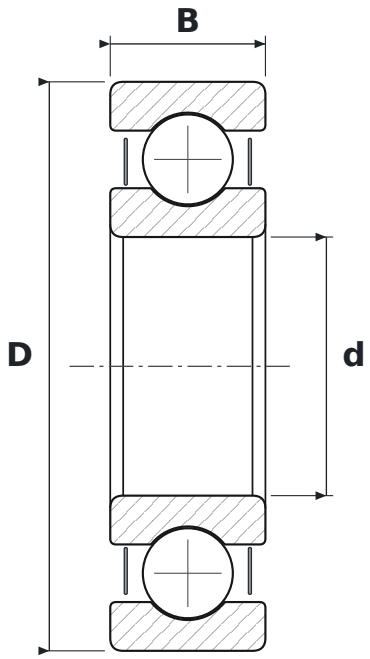

DIMENSIONS

d	bore diameter	**10 mm**
D	outside diameter	**22 mm**
B	width	**6 mm**

WHAT 61900-2Z MEANS

619	łożysko kulkowe zwykłe (6), seria 19 – cienkościenna
2Z	steel shields, both sides

SPECIFICATIONS

Manufacturer	**NKE**
Manufacturer designation	**61900-2Z**
Rolling elements	**single-row ball bearing**
Mass	**0.01 kg**