# Deep groove ball bearing 61900 C3 NKE

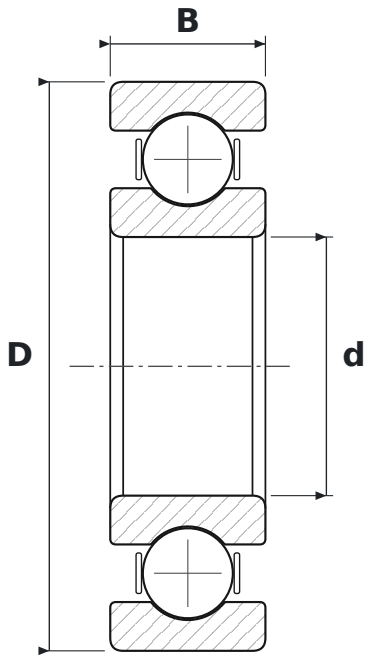


## DIMENSIONS

| | | |
|---|---|---|
| **d** | bore diameter | **10 mm** |
| **D** | outside diameter | **22 mm** |
| **B** | width | **6 mm** |

## WHAT 61900 C3 MEANS

| | |
|---|---|
| **619** | łożysko kulkowe zwykłe (6), seria 19 – cienkościenna |
| **C3** | radial clearance greater than normal |

## SPECIFICATIONS

| | |
|---|---|
| Manufacturer | **NKE** |
| Manufacturer designation | **61900 C3** |
| Rolling elements | **single-row ball bearing** |
| Mass | **0.01 kg** |