Deep groove ball bearing 61900 FAG

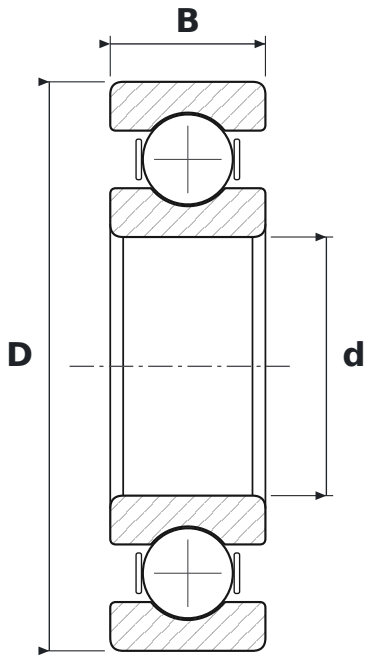

DIMENSIONS

d	bore diameter	**10 mm**
D	outside diameter	**22 mm**
B	width	**6 mm**

SPECIFICATIONS

Manufacturer	**FAG**
Manufacturer designation	**61900**
Rolling elements	**single-row ball bearing**
Seal	**open – no seals**
Radial internal clearance	**CN – normal**
Mass	**0.01 kg**