Deep groove ball bearing 61901-2Z ZEN

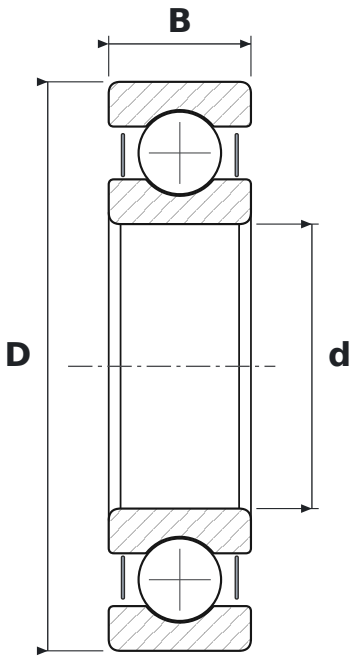

DIMENSIONS

d	bore diameter	**12 mm**
D	outside diameter	**24 mm**
B	width	**6 mm**

WHAT 61901-2Z MEANS

619	łożysko kulkowe zwykłe (6), seria 19 – cienkościenna
2Z	steel shields, both sides

SPECIFICATIONS

Manufacturer	**ZEN**
Manufacturer designation	**61901-2Z**
Rolling elements	**single-row ball bearing**