CASTOMER

DATASHEET

Deep groove ball bearing 61901 C3 NKE

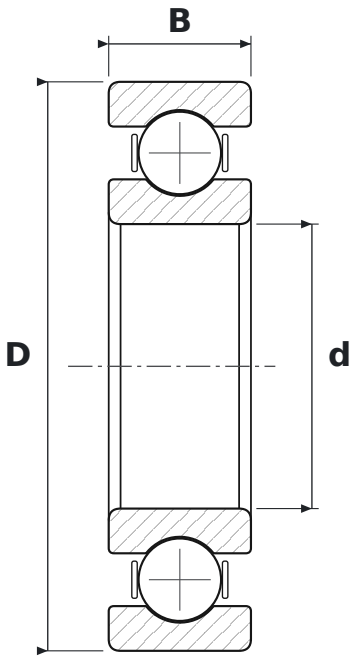

DIMENSIONS

d	bore diameter	**12 mm**
D	outside diameter	**24 mm**
B	width	**6 mm**

WHAT 61901 C3 MEANS

619	łożysko kulkowe zwykłe (6), seria 19 – cienkościenna
C3	radial clearance greater than normal

SPECIFICATIONS

Manufacturer	**NKE**
Manufacturer designation	**61901 C3**
Rolling elements	**single-row ball bearing**