CASTOMER

DATASHEET

Deep groove ball bearing 61904-2Z NKE

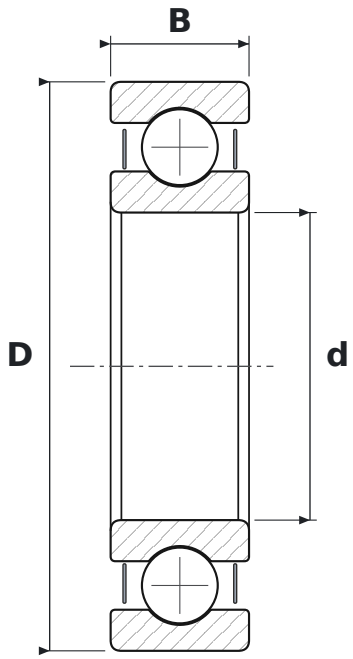

DIMENSIONS

d	bore diameter	**20 mm**
D	outside diameter	**37 mm**
B	width	**9 mm**

WHAT 61904-2Z MEANS

619	łożysko kulkowe zwykłe (6), seria 19 – cienkościenna
2Z	steel shields, both sides

SPECIFICATIONS

Manufacturer	**NKE**
Manufacturer designation	**61904-2Z**
Rolling elements	**single-row ball bearing**
Mass	**0.036 kg**