Deep groove ball bearing 61904 C3 SKF

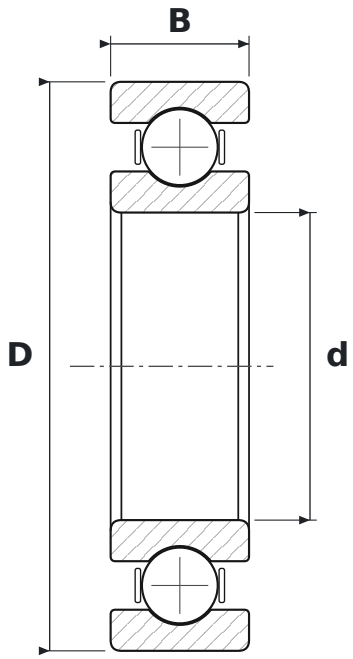

DIMENSIONS

d	bore diameter	**20 mm**
D	outside diameter	**37 mm**
B	width	**9 mm**

WHAT 61904 C3 MEANS

619	łożysko kulkowe zwykłe (6), seria 19 – cienkościenna
C3	radial clearance greater than normal

SPECIFICATIONS

Manufacturer	**SKF**
Manufacturer designation	**61904 C3**
Rolling elements	**single-row ball bearing**
Mass	**0.033 kg**