Deep groove ball bearing 61904 FAG

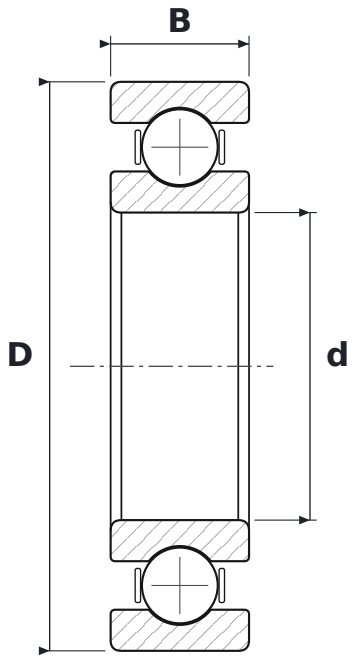

DIMENSIONS

d	bore diameter	**20 mm**
D	outside diameter	**37 mm**
B	width	**9 mm**

SPECIFICATIONS

Manufacturer	**FAG**
Manufacturer designation	**61904**
Rolling elements	**single-row ball bearing**
Seal	**open – no seals**
Radial internal clearance	**CN – normal**
Mass	**0.036 kg**