Deep groove ball bearing 61905-2Z FAG

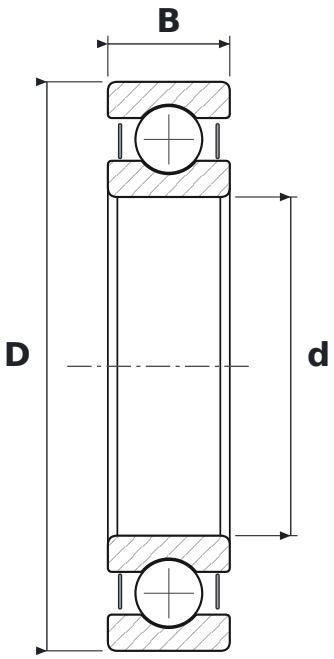

DIMENSIONS

d	bore diameter	**25 mm**
D	outside diameter	**42 mm**
B	width	**9 mm**

WHAT 61905-2Z MEANS

619	łożysko kulkowe zwykłe (6), seria 19 – cienkościenna
2Z	steel shields, both sides

SPECIFICATIONS

Manufacturer	**FAG**
Manufacturer designation	**61905-2Z**
Rolling elements	**single-row ball bearing**
Mass	**0.045 kg**