Deep groove ball bearing 62/28 NACHI

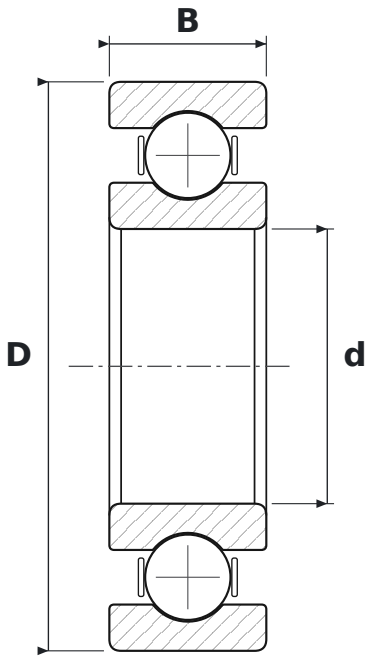

DIMENSIONS

d	bore diameter	**28 mm**
D	outside diameter	**58 mm**
B	width	**16 mm**

SPECIFICATIONS

Manufacturer	**NACHI**
Manufacturer designation	**62/28**
Rolling elements	**single-row ball bearing**
Radial internal clearance	**CN – normal**