Deep groove ball bearing 62/32 C3 NTN

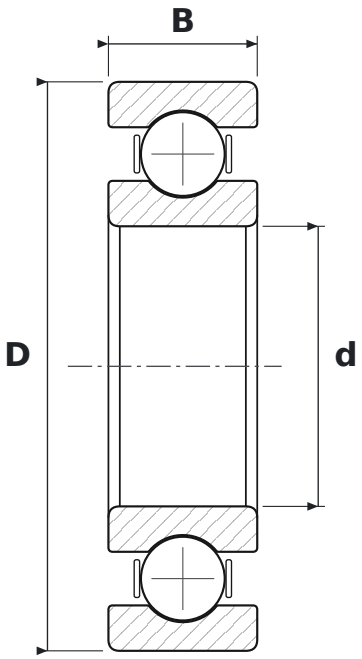

DIMENSIONS

d	bore diameter	**32 mm**
D	outside diameter	**65 mm**
B	width	**17 mm**

WHAT 62/32 C3 MEANS

62	łożysko kulkowe zwykłe (6), seria średnic 2 – lekka
C3	radial clearance greater than normal

SPECIFICATIONS

Manufacturer	**NTN**
Manufacturer designation	**62/32 C3**
Rolling elements	**single-row ball bearing**