Deep groove ball bearing 6200-2NSE9CM INNE

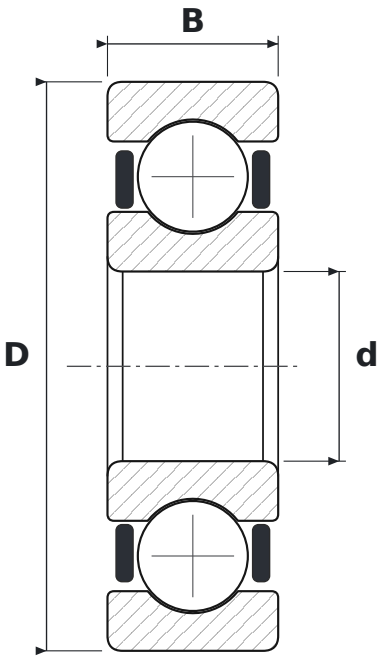

DIMENSIONS

d	bore diameter	**10 mm**
D	outside diameter	**30 mm**
B	width	**9 mm**

SPECIFICATIONS

Manufacturer	**INNE**
Manufacturer designation	**6200-2NSE9CM**
Rolling elements	**single-row ball bearing**
2RS	**contact rubber seals, both sides**
CM	**clearance for electric motors (quiet running)**
Radial internal clearance	**CN – normal**
Mass	**0.03 kg**