Deep groove ball bearing 6200-2RS TIMKEN

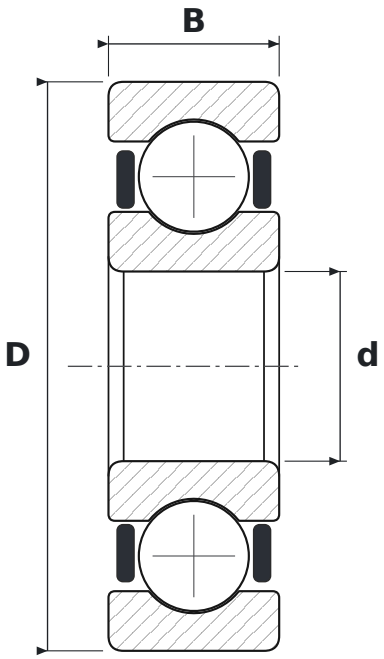

DIMENSIONS

d	bore diameter	**10 mm**
D	outside diameter	**30 mm**
B	width	**9 mm**

WHAT 6200-2RS MEANS

62	łożysko kulkowe zwykłe (6), seria średnic 2 – lekka
2RS	contact rubber seals, both sides

SPECIFICATIONS

Manufacturer	**TIMKEN**
Manufacturer designation	**6200-2RS**
Rolling elements	**single-row ball bearing**