Deep groove ball bearing 6200 CM INNE

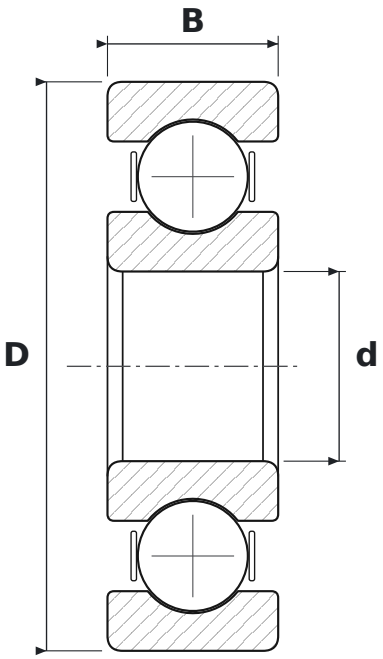

DIMENSIONS

d	bore diameter	**10 mm**
D	outside diameter	**30 mm**
B	width	**9 mm**

WHAT 6200 CM MEANS

62	łożysko kulkowe zwykłe (6), seria średnic 2 – lekka
CM	clearance for electric motors (quiet running)

SPECIFICATIONS

Manufacturer	**INNE**
Manufacturer designation	**6200 CM**
Rolling elements	**single-row ball bearing**
Mass	**0.03 kg**