Deep groove ball bearing 6200 LTZZ SNR

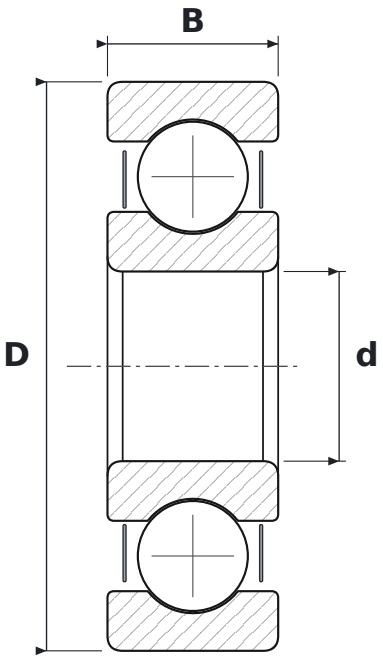

DIMENSIONS

d	bore diameter	**10 mm**
D	outside diameter	**30 mm**
B	width	**9 mm**

SPECIFICATIONS

Manufacturer	**SNR**
Manufacturer designation	**6200 LTZZ**
Rolling elements	**single-row ball bearing**
2Z	**steel shields, both sides**
Radial internal clearance	**CN – normal**
Mass	**0.035 kg**