Deep groove ball bearing 6200 ZZC3/5K NTN

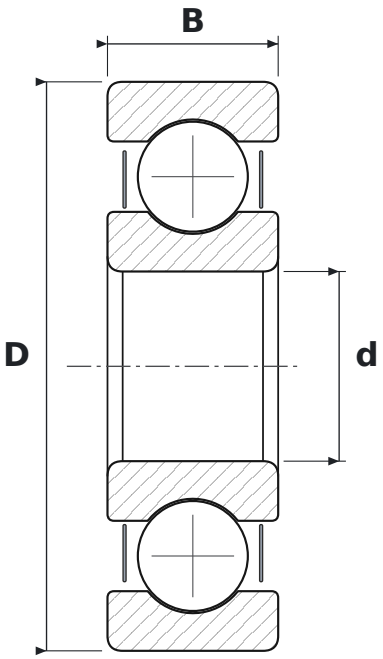

DIMENSIONS

d	bore diameter	**10 mm**
D	outside diameter	**30 mm**
B	width	**9 mm**

WHAT 6200 ZZC3/5K MEANS

62	łożysko kulkowe zwykłe (6), seria średnic 2 – lekka
ZZ	blaszki ochronne, dwustronne
C3	radial clearance greater than normal
5K	smar Kyodo Yushi Multemp SRL (od −40 do +150 °C)

SPECIFICATIONS

Manufacturer	**NTN**
Manufacturer designation	**6200 ZZC3/5K**
Rolling elements	**single-row ball bearing**