Deep groove ball bearing 6201-2RSC3LHT23 SKF

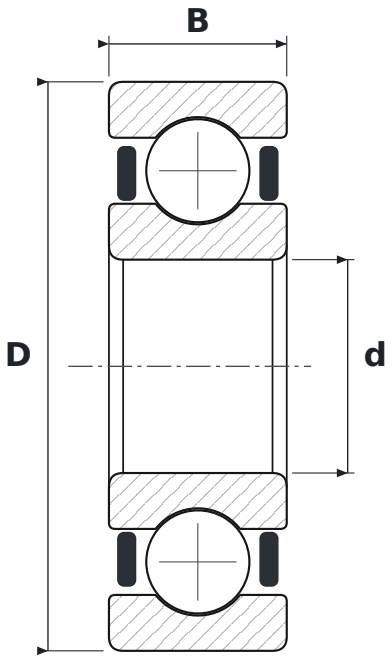

DIMENSIONS

d	bore diameter	**12 mm**
D	outside diameter	**32 mm**
B	width	**10 mm**

WHAT 6201-2RSC3LHT23 MEANS

62	łożysko kulkowe zwykłe (6), seria średnic 2 – lekka
2RS	contact rubber seals, both sides
C3	radial clearance greater than normal
LHT23	smar o szerokim zakresie temperatur do cichej pracy: mydło litowe, olej estrowy, NLGI 2–3

SPECIFICATIONS

Manufacturer	**SKF**
Manufacturer designation	**6201-2RSC3LHT23**
Rolling elements	**single-row ball bearing**
Basic dynamic load rating C	**7.28 kN**
Basic static load rating C0	**3.1 kN**
Mass	**0.037 kg**