Deep groove ball bearing 6201-ZZ TIMKEN

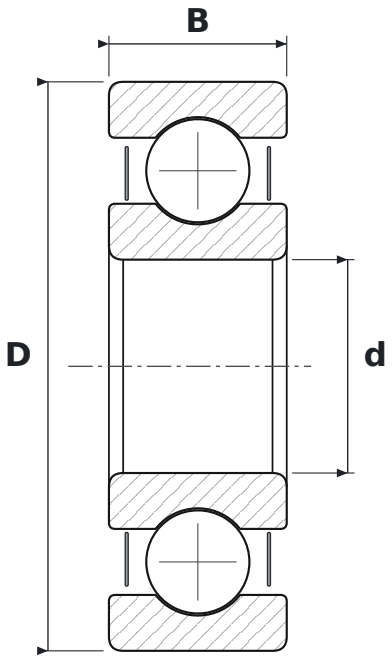

DIMENSIONS

d	bore diameter	**12 mm**
D	outside diameter	**32 mm**
B	width	**10 mm**

WHAT 6201-ZZ MEANS

62	łożysko kulkowe zwykłe (6), seria średnic 2 – lekka
ZZ	blaszki ochronne, dwustronne

SPECIFICATIONS

Manufacturer	**TIMKEN**
Manufacturer designation	**6201-ZZ**
Rolling elements	**single-row ball bearing**