Deep groove ball bearing 6201 ZZECM NACHI

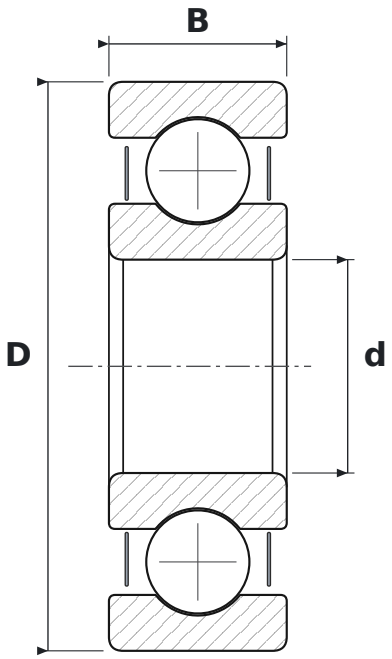

DIMENSIONS

d	bore diameter	**12 mm**
D	outside diameter	**32 mm**
B	width	**10 mm**

WHAT 6201 ZZECM MEANS

62	łożysko kulkowe zwykłe (6), seria średnic 2 – lekka
ZZE	blaszki ochronne, dwustronne
CM	clearance for electric motors (quiet running)

SPECIFICATIONS

Manufacturer	**NACHI**
Manufacturer designation	**6201 ZZECM**
Rolling elements	**single-row ball bearing**