Deep groove ball bearing 6202-C FAG

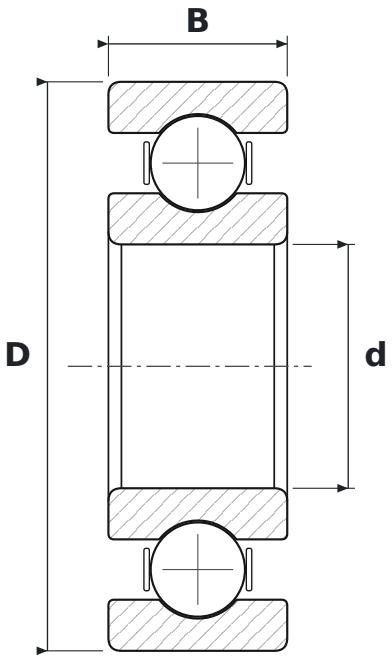

DIMENSIONS

d	bore diameter	**15 mm**
D	outside diameter	**35 mm**
B	width	**11 mm**

WHAT 6202-C MEANS

62	łożysko kulkowe zwykłe (6), seria średnic 2 – lekka
C	generation C – revised internal design (FAG)

SPECIFICATIONS

Manufacturer	**FAG**
Manufacturer designation	**6202-C**
Rolling elements	**single-row ball bearing**